REV.	DESCRIPTION	DATE
—	RELEASE	Nov. 07, 2002
1	RELEASE	Dec. 03, 2002
2		

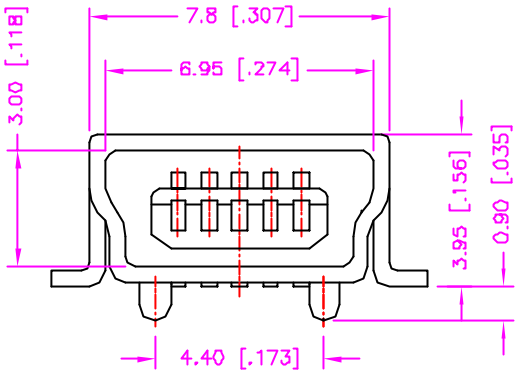

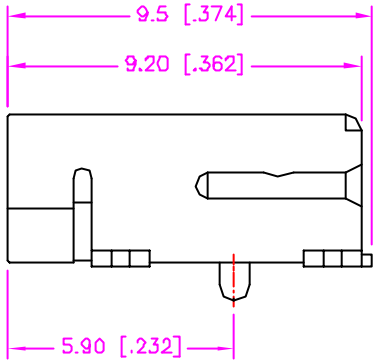

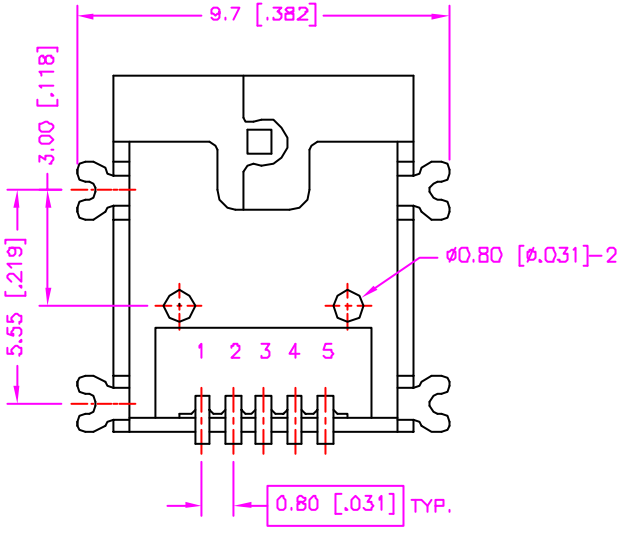

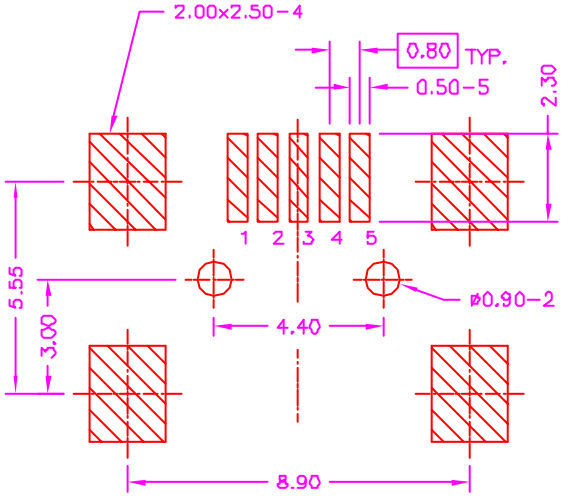

RECOMMEND P.C.B. LAYOUT
TOP VIEW

MATERIALS

1. HOUSING : HI.-TEMP. PLASTIC (UL 94V-0), BLACK.
2. TERMINAL : COPPER ALLOY. (t=0.30mm)
3. SHELL : BRASS, NICKEL PLATING. (t=0.40mm)

SPECIFICATION

1. CURRENT RATING : 1 AMP. MAX.
2. DIELECTRIC WITHSTANDING VOLTAGE : 30V AC R.M.S. FOR ONE MINUTE.
3. INSULATION RESISTANCE : 100M OHMS MIN. AT 100V DC.
4. CONTACT RESISTANCE : 50m OHMS MAX.
5. OPERATING TEMPERATURE : 20°C TO +85°C.
6. DURABILITY : 5000 CYCLE.
7. MATING FORCE : 3.5kgs MAX.
8. UNMATING FORCE : 0.7kgs MIN.
9. MAX. PROCESSING TEMP. : 230°C FOR 30 ~ 60 SECONDS.

ORDER INFORMATION :

22 - 16 07 - 5 - * T

- 22 - 16: SERIES CODE
- 07: TYPE 07
- 5: NUMBER OF POSITIONS
- *: CONTACT PLATING OPTIONS
  - 1 : GOLD FLASH
  - 2 : .000010" GOLD
  - 3 : .000015" GOLD
  - 5 : .000030" GOLD
- T: TIN PLATING ON SOLDER TAIL

TOLERANCE	DRAWER	ASTRON TECHNOLOGY CORP.
.0=±0.30 [.012] .00=±0.20 [.008] .000=±.XXX .0000=±. ANG.=±3°	CHECK Katherlin APP'D ALEX PRODUCT SPEC.	NAME: MINI. USB P.C.B. MOUNT B TYPE, SMT METAL SHIELD, FEMALE
UNITS : mm [inch]		DRAW NO. C622-0308
SCALE NONE / SIZE A4	SHEET 1 OF 1 / REV. B	03006