REV.	DESCRIPTION	DATE
—	RELEASE	Sep. 30, 2000
1	P/N MODIFY	Jun. 1, 2001
2		

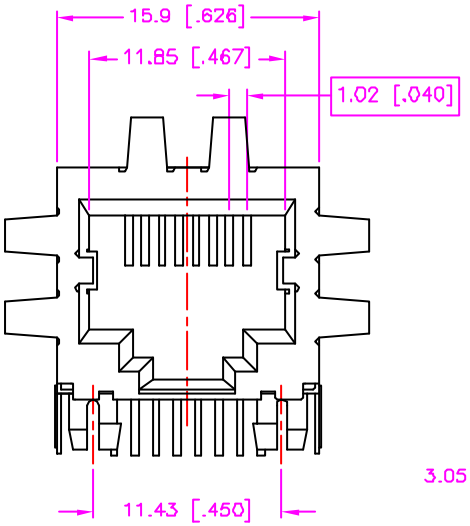

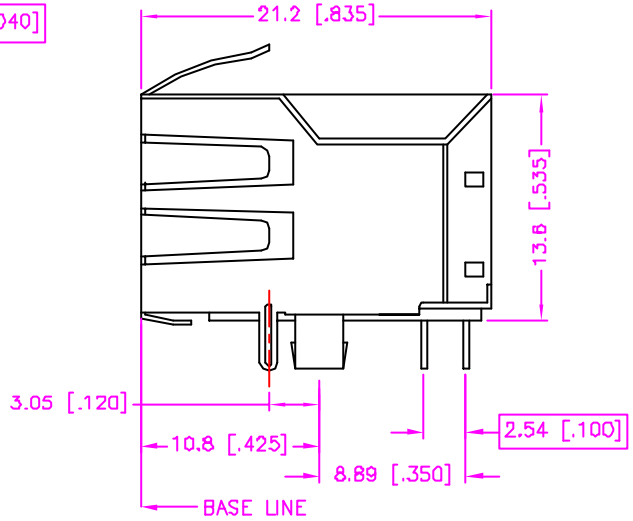

MATERIALS

1. HOUSING : P.B.T. (UL 94V-0), BLACK.
2. TERMINAL : ø0.45mm PHOSPHOR BRONZE.
3. SHIELD : COPPER ALLOY, NICKEL PLATING. (t=0.25mm)

SPECIFICATION

1. CURRENT RATING : 1.5 AMP. MAX.
2. DIELECTRIC WITHSTANDING VOLTAGE : 1000V AC R.M.S. FOR ONE MINUTE.
3. INSULATION RESISTANCE : 500M OHMS MIN. AT 500V DC.
4. CONTACT RESISTANCE : 30m OHMS MAX.
5. OPERATING TEMPERATURE : -40°C TO +70°C.
6. DURABILITY : 750 CYCLES.

ORDER INFORMATION :

17 - 04 03 1 - ** - * G

- 17 - 04: SERIES CODE
- 03: TYPE 03
- 1: WITH +3.05mm SHIELD TAB
- **: POSITION & CONTACT
  - 82 : 8P2C
  - 84 : 8P4C
  - 86 : 8P6C
  - 88 : 8P8C
- *: CONTACT PLATING OPTIONS
  - 1 : GOLD FLASH
  - 2 : .000010" GOLD
  - 3 : .000015" GOLD
  - 5 : .000030" GOLD
- G: GOLD PLATING ON SOLDER TAIL

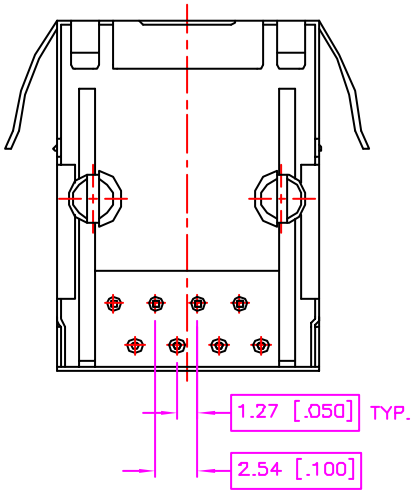

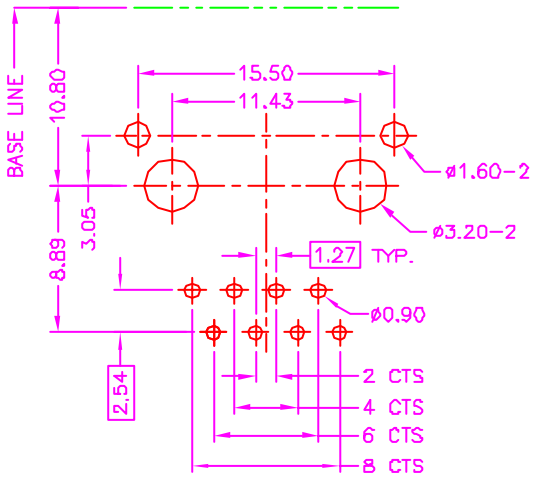

RECOMMEND P.C.B. LAYOUT
BOTTOM VIEW

TOLERANCE .0=±.30 [.012] .00=±.20 [.008] .000=±.XXX .0000=±. ANG.=±3°	DRAWER SUE CHECK Katherlin APP'D WFEZY	Astron ASTRON TECHNOLOGY CORP.
UNITS : mm [inch]	PRODUCT SPEC. — 509-0070	NAME MODULAR JACK SIDE ENTRY, METAL SHIELD WITH SPRING DRAW NO. C564-0401
SCALE NONE / SIZE A4	SHEET 1 OF 1 / REV. B	08015