REV.	DESCRIPTION	DATE
—	RELEASE	Oct. 26, 2001
1		
2		

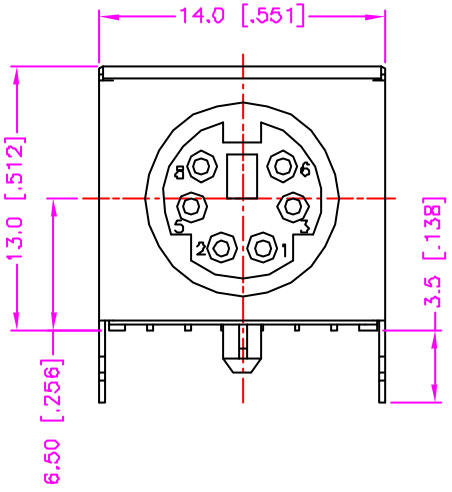

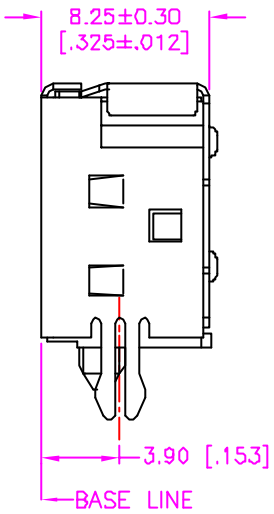

MATERIALS

1. HOUSING : HI.-TEMP. PLASTIC (UL 94V-0), BLACK.
2. TERMINAL : PHOSPHOR BRONZE, GOLD PLATING ON CONTACT AREA, TIN PLATING ON SOLDER TAIL. (t=0.20mm)
3. SHIELD : BRASS, TIN PLATING. (t=0.30mm)

SPECIFICATION

1. CURRENT RATING : 1 AMP. MAX.
2. DIELECTRIC WITHSTANDING VOLTAGE : 500V AC R.M.S. FOR ONE MINUTE.
3. INSULATION RESISTANCE : 100M OHMS MIN. AT 500V DC
4. CONTACT RESISTANCE : 30m OHMS MAX.
5. OPERATING TEMPERATURE : -25°C TO +85°C.
6. DURABILITY : 1000 CYCLES.
7. MATING FORCE : 0.5 ~ 4.5kgs.
8. UNMATING FORCE : 0.5 ~ 4.5kgs.
9. MAX. PROCESSING TEMP. : 230°C FOR 30 ~ 60 SECONDS.

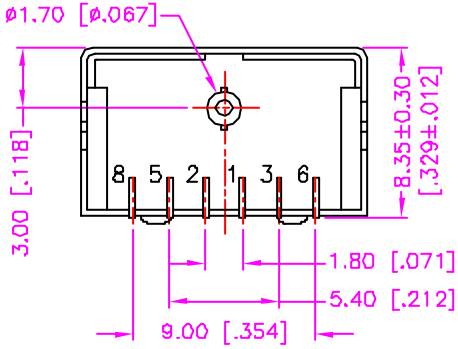

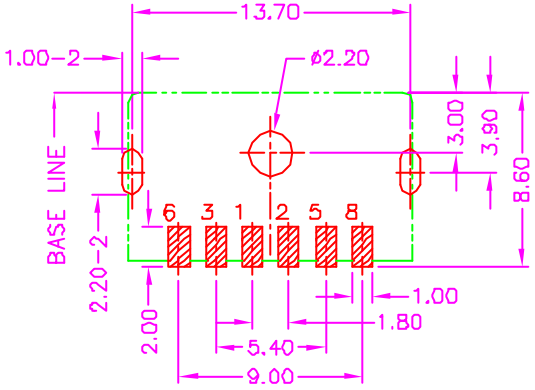

RECOMMEND P.C.B. LAYOUT
TOP VIEW

ORDER INFORMATION

13 - 4201 - ✱ - ✱ T

- SERIES CODE
- NUMBER OF POSITION
- CONTACT PLATING OPTIONS
  - 1 : GOLD FLASH
  - 2 : .000010" GOLD
  - 3 : .000015" GOLD
  - 5 : .000030" GOLD
- TIN PLATING ON SOLDER TAIL

4 PINS	6 PINS
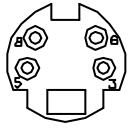	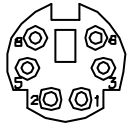

TOLERANCE .0=±.30 [.012] .00=±.20 [.008] .000=±.XXX .0000=±. ANG.=±3°	DRAWER YUO		Astron ASTRON TECHNOLOGY CORP.
	CHECK Katherlin		
	APP'D ALEX		NAME MINI. CIRCULAR DIN P.C.B. MOUNT RIGHT ANGLE FULL METAL SHIELD, FEMALE SLIM TYPE SMT
UNITS : mm [inch]	PRODUCT SPEC. —		
			DRAW NO. C542-0101
SCALE NONE / SIZE A4	SHEET 1 OF 1	REV. A	08005