REV.	DESCRIPTION	DATE
—	RELEASE	Mar. 25, 2003
1		
2		

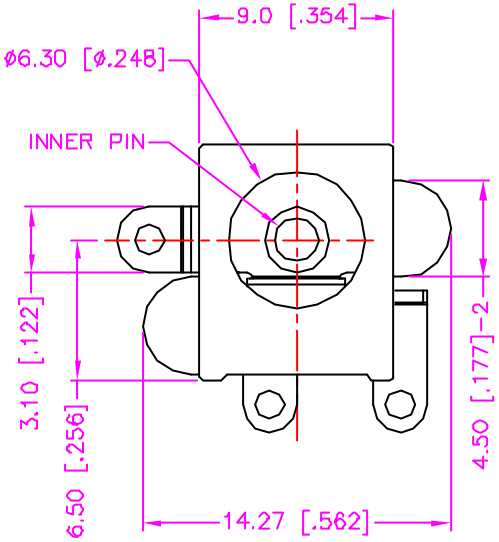

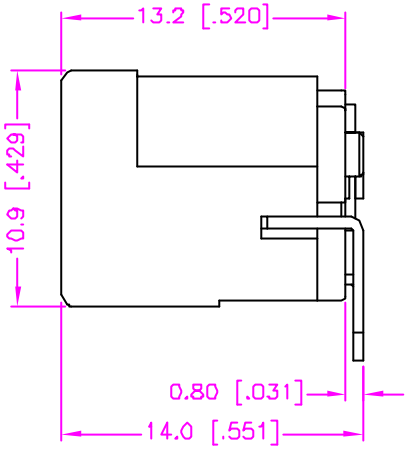

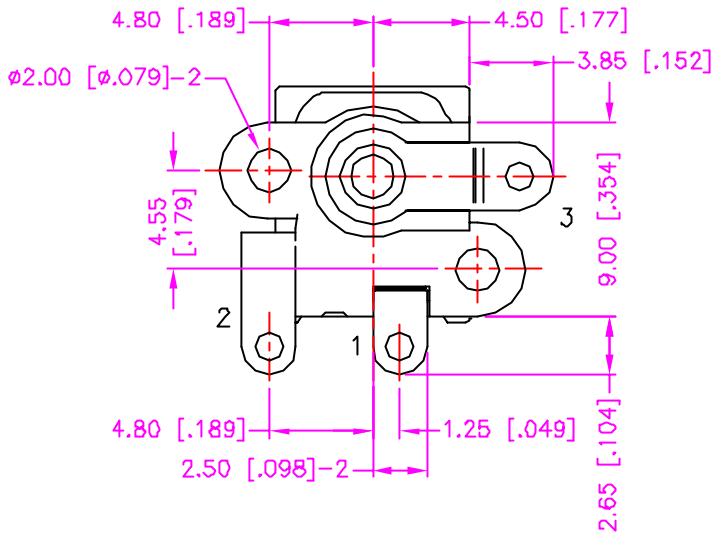

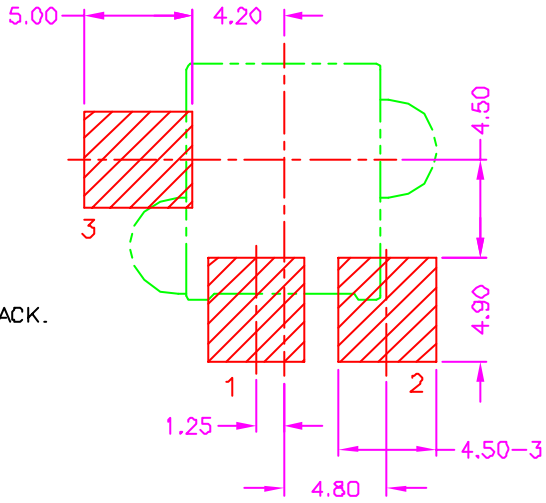

RECOMMEND P.C.B LAYOUT
TOP VIEW

MATERIALS

1. HOUSING : HI.-TEMP. PLASTIC (UL 94V-0), BLACK.
2. TERMINAL : COPPER ALLOY, SILVER PLATING.
3. CENTER PIN : COPPER ALLOY, NICKEL PLATING.

SPECIFICATION

1. CURRENT RATING : 2.5 AMP. MAX.
2. DIELECTRIC WITHSTANDING VOLTAGE : 500V AC R.M.S. FOR ONE MINUTE.
3. INSULATION RESISTANCE : 100M OHMS MIN. AT 500V DC
4. CONTACT RESISTANCE : 50m OHMS MAX.
5. OPERATING TEMPERATURE : -25°C TO +70°C.
6. DURABILITY : 5000 CYCLES.
7. MATING FORCE : 0.3 ~ 3.0kgs.
8. UNMATING FORCE : 0.3 ~ 3.0kgs.
9. MAX. PROCESSING TEMPERATURE : 230°C FOR 30 ~ 60 SECONDS.

ORDER INFORMATION

15 - 02 08 *

SERIES CODE

TYPE 08

INNER PIN DIA. OPTIONS
2 : ø2.50mm
4 : ø2.00mm

SCHEMATIC

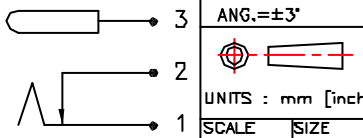

TOLERANCE .0=±.30 [.012] .00=±.20 [.008] .000=±.XXX .0000=±. ANG.=±3°	DRAWER Katherlin	Astron ASTRON TECHNOLOGY CORP.	
	CHECK LION	NAME DC POWER JACK P.C.B. MOUNT, SMT TYPE FEMALE	
	APP'D SUE		
UNITS : mm [inch]	PRODUCT SPEC. —		
	516-0023	DRAW NO. C522-0207	
SCALE NONE / SIZE A4	SHEET 1 OF 1 / REV. A	08005	