REV.	DESCRIPTION	DATE
—	RELEASE	Mar 24, 2000
1		
2		

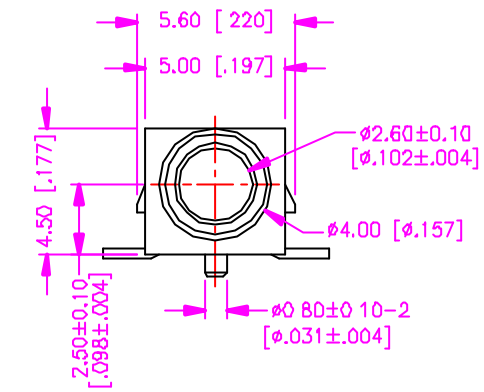

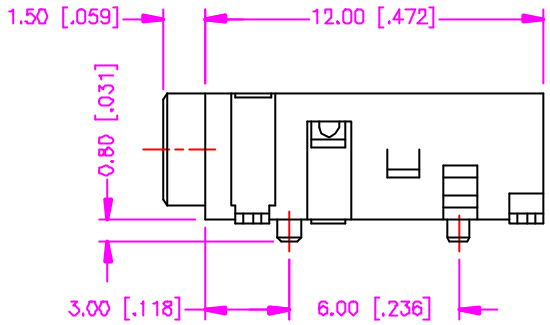

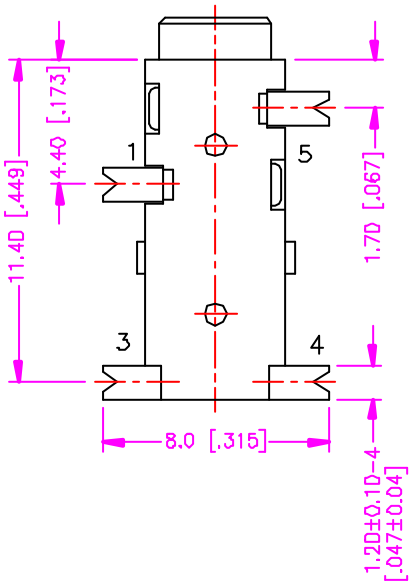

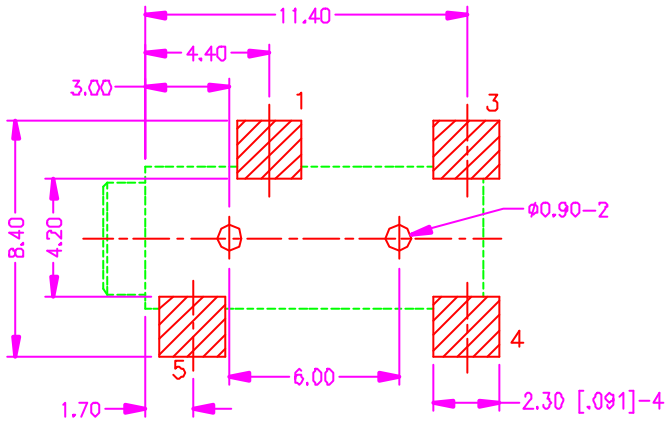

RECOMMEND P.C B LAYOUT
TOP VIEW

MATERIALS

1 HOUSING : HI-TEMP. PLASTIC (UL 94V-0), BLACK.
2. TERMINAL : COPPER ALLOY, SILVER PLATING.

SPECIFICATION

1. CURRENT RATING : 0.3 AMP. MAX.
2. DIELECTRIC WITHSTANDING VOLTAGE : 250V AC R.M.S. FOR ONE MINUTE.
3. INSULATION RESISTANCE : 100M OHMS MIN. AT 250V DC
4. CONTACT RESISTANCE : 50m OHMS MAX.
5. OPERATING TEMPERATURE : -25°C TO +85°C.
6. DURABILITY : 5000 CYCLES.
7. MATING FORCE : 0.3 ~ 3.0kgs.
8. UNMATING FORCE · 0.3 ~ 3.0kgs
9. MAX. PROCESSING TEMP. . 230°C FOR 30 ~ 60 SECONDS.

ORDER INFORMATION

E25S03 A A - * *

- E25S03: SERIES CODE
- A: ALL PLASTIC HOUSING
- A: PLASTIC BUSHING
- *: NUMBER OF CONDUCTOR
- *: AUDIO FUNCTION
  - M : MONO
  - T : TIP
  - S : STEREO

SCHEMATIC

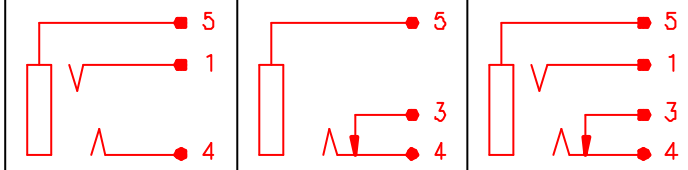

E25S03AA-3S | E25S03AA-3M | E25S03AA-4T

TOLERANCE
.0=±.30 [.012]
.00=±.20 [.008]
.000=±.XXX
.0000=±.
ANG.=±3°

UNITS : mm [inch]

DRAWER	Katherlin
CHECK	Sue
APP'D	Wisely
PRODUCT SPEC.	—
	510-0021 511-0014
SCALE	NONE
SIZE	A4
SHEET	1 OF 1
REV.	A

Astron
ASTRON TECHNOLOGY CORP.

NAME: EARPHONE JACK 2.50mm DIA. SMT TYPE, ALL PLASTIC

DRAW NO. C507-0001

08005