REV.	DESCRIPTION	DATE
—	RELEASE	Apr. 18, 2001
1		
2		

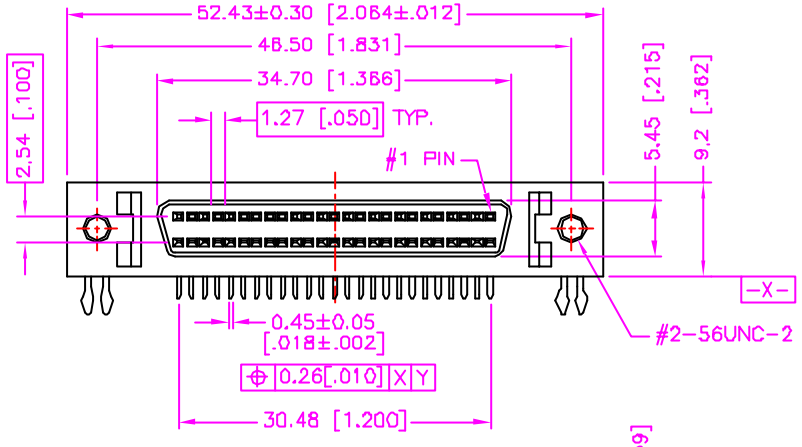

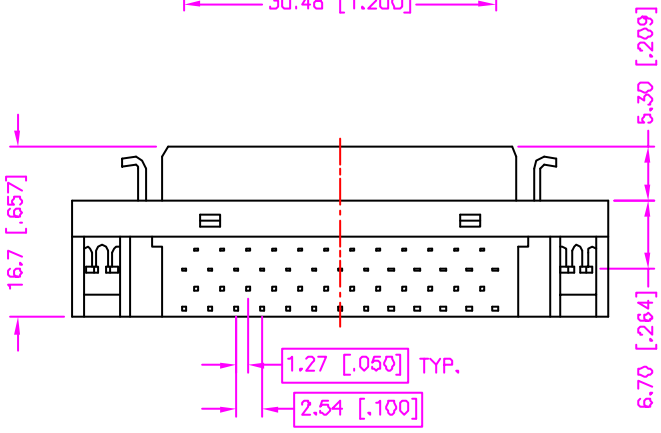

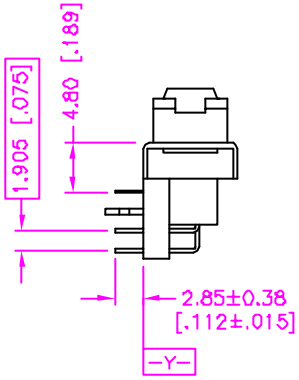

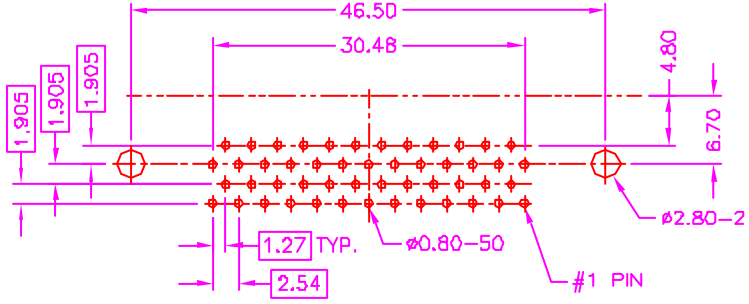

RECOMMEND P.C.B. LAYOUT
BOTTOM VIEW

MATERIALS

1. HOUSING : THERMOPLASTIC (UL 94V-0), BLACK.
2. TERMINAL : PHOSPHOR BRONZE. (t=0.30mm)
3. SHELL : STEEL, NICKEL PLATING.

SPECIFICATION

1. CURRENT RATING : 1 AMP. MAX.
2. DIELECTRIC WITHSTANDING VOLTAGE : 500V AC R.M.S. FOR ONE MINUTE.
3. INSULATION RESISTANCE : 500M OHMS MIN. AT 500V DC.
4. CONTACT RESISTANCE : 35m OHMS MAX.
5. OPERATING TEMPERATURE : -20°C TO +85°C.
6. DURABILITY : 500 CYCLES.

ORDER INFORMATION :

10 - 07 1 - 50 - * T - 1

- SERIES CODE: 10
- P.C.B. LAYOUT STYLE: 07
  - 1 : STYLE 1
- NUMBER OF POSITION: 50
- CONTACT PLATING OPTIONS: *
  - 1 : GOLD FLASH
  - 2 : .000010" GOLD
  - 3 : .000015" GOLD
  - 5 : .000030" GOLD
- TIN PLATING ON SOLDER TAIL: T
- TYPE 1: 1

TOLERANCE .0=±.30 [.012] .00=±.20 [.008] .000=±.XXX .0000=±. ANG.=±3°	DRAWER Katherlin		Astron ASTRON TECHNOLOGY CORP.
	CHECK Sue		NAME SCSI SERIES PIN TYPE, FEMALE, RIGHT ANGLE STYLE 1, METAL SHIELD WITH LATCH
	APP'D Wisely		
	PRODUCT SPEC. —		
UNITS : mm [inch]			DRAW NO. C451-0019
SCALE NONE / SIZE A4	SHEET 1 OF 1	REV. A	18003