REV.	DESCRIPTION	DATE
—	RELEASE	Dec. 18, 2002
B	DRAW MODIFY	Jan. 02, 2003
C	DRAW MODIFY	Jan. 05, 2004

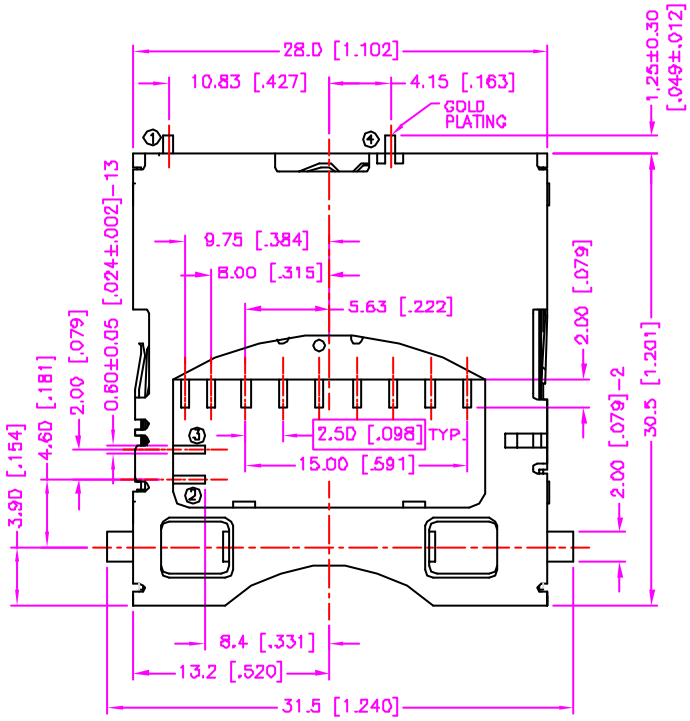

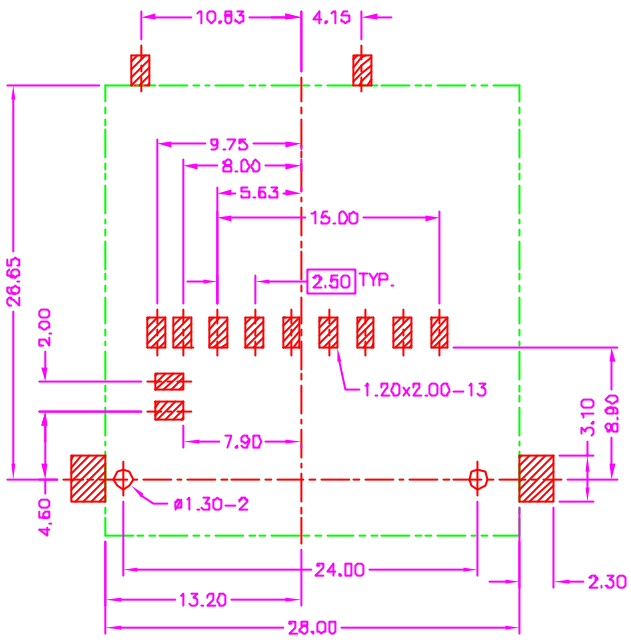

RECOMMEND P.C.B. LAYOUT
TOP VIEW

CARD DETECTION	
WITHOUT CARD	CARD INSERTED
1 — 4 GND	1 — 4 GND

WRITE PROTECT SWITH	
WRITE PROTECTION LOCK	WRITE PROTECTION UNLOCK
2 — 3 GND	2 — 3 GND

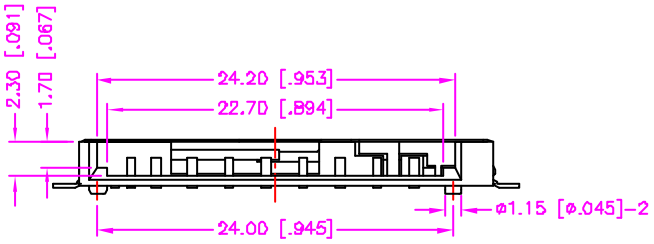

ORDER INFORMATION

54 - 21 08 - 9

SERIES CODE — TYPE 08 — NUMBER OF POSITIONS

MATERIALS

1. HOUSING : HI.-TEMP. PLASTIC (UL 94V-0), BLACK.
2. TERMINAL : COPPER ALLOY, GOLD PLATING ON CONTACT, TIN/LEAD PLATING ON SOLDER TAIL.
3. SHELL : STAINLESS STEEL.

SPECIFICATION

1. CURRENT RATING : 0.5 AMP. MAX.
2. DIELECTRIC WITHSTANDING VOLTAGE : 500V AC R.M.S. FOR ONE MINUTE.
3. INSULATION RESISTANCE : 1000M OHMS MIN. AT 500V DC.
4. CONTACT RESISTANCE : 100m OHMS MAX.
5. OPERATING TEMPERATURE : -25°C TO +85°C.
6. MAX. PROCESSING TEMP. : 230°C FOR 30 ~ 60 SECONDS.

TOLERANCE	DRAWER	ASTRON TECHNOLOGY CORP.
.0=±0.30 [.012] .00=±0.20 [.008] .000=±0.10 [.004] .0000=±. ANG.=±3°	CHECK	
	APP'D	NAME: MEMORY CARD SD READER CONNECTOR P.C.B. MOUNT, SMT TYPE (PUSH - PUSH TYPE)
UNITS : mm [inch]	PRODUCT SPEC. —	DRAW NO. C254-2107
SCALE NONE / SIZE A4	SHEET 1 OF 1 / REV. C	10019